Technical data

Dimensions and weights of SLZ standard actuators

Size range (nominal force) kN		10-63	100/160	250/400	630		1000	
Models (actuator name)		SLZ 10			SLZ 630	SLZ 630 H	SLZ 1000	SLZ 1000 H
		SLZ 16						
		SLZ 25	SLZ 100	SLZ 250				
		SLZ 40	SLZ 160	SLZ 400				
		SLZ 63						
	Nominal stroke S_n (mm)							
Dimension A_0	40	498	-	-	-		-	
	100	558	605	605	705	750	705	750
	250	856	905	905	1005	1050	1005	1050
	400	1156	1205	1205	1305	1350	1305	1350
B		205	275	370	470	-	550	-
C		126	224	315	370		440	
C_1		-	125	190	236		300	
C_2		-	28	39	50		50	
C_3		125	205	280	360		430	
C_4		15	54	60	79		82	
E		Ø100 10xM12	Ø160 12xM12	Ø224 12xM16	Ø280 12xM20		Ø355 12xM24	
E_1		25	25	30	30		50	
G		Ø180 10x Ø11	Ø250 12x Ø14	Ø335 12x Ø18	Ø425 12x Ø22	-	Ø500 12x Ø26	-
H		50	60	70	80	-	90	-
J		57	105	145.5	180		216	
(K_A) K		(43) 45	80	125	160		200	
L		35 H7	20	40	40			
M		M24	Ø45 8xM10	Ø71 8xM16	Ø112 8xM20			
N		50	25	30	45			
V (extension)		-	35	45	45	-	45	-
Overflow W		18	18	8	5			
	Nominal stroke S_n (mm)							
weight (kg)	SLZ-…-40	35	-	-	-		-	
	SLZ-…-100	38	155	295	500		740	
	SLZ-…-250	65	240	435	730		1060	
	SLZ-…-400	-	300	560	960		1380	

Example: SLZ 630-100 VH

- Head mounting
- Piston extension 45mm
- Stroke 100mm
- Nominal force 630kN

V) A piston extension is required when an actuator SLZ 100 up to SLZ 1000 is mounted in a machine frame PC. Coding example: SLZ 630-100 V.

H) Head mounting by tapped holes in the top of the chassis (see page 3) Coding example: SLZ 630-100 H.

*) Dimension F: cross head (respectively thickness of plate) of frame PC.

SANDNER-Messtechnik GmbH
Am Winkelgraben 4
64584 Biebesheim / Rhein
Tel. +49 6258 / 98380
Fax +49 6258 / 983820

© release September 2011

info@sandner-messtechnik.com
www.sandner-messtechnik.com

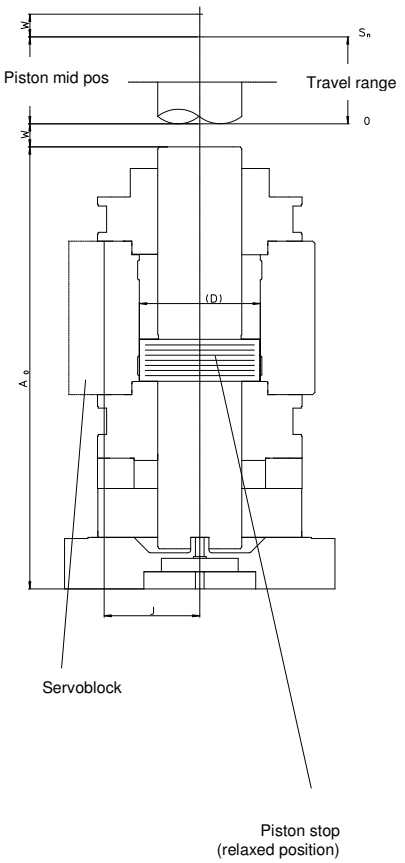

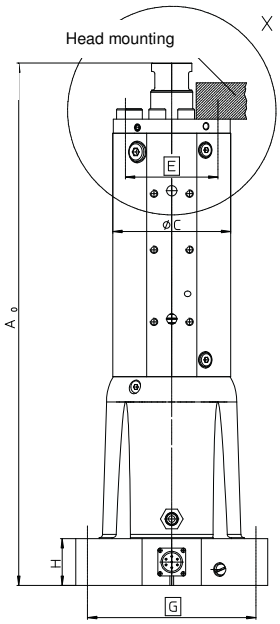

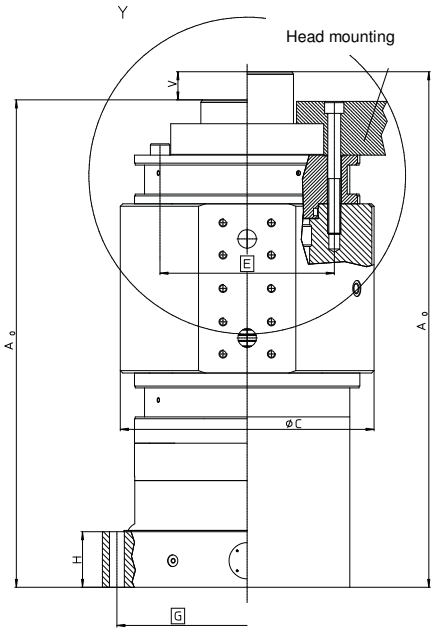

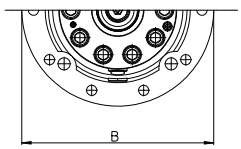

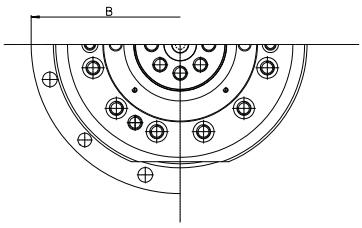

SLZ 10/ 16/ 25/ 40/ 63
detail X
SLZ 100/ 160/ 250/ 400/ 630/ 1000
detail Y

Piston expanse

$$A_K = \frac{\pi}{4}(D^2 - K^2)$$

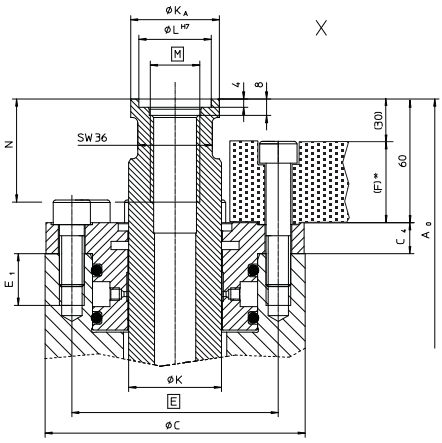

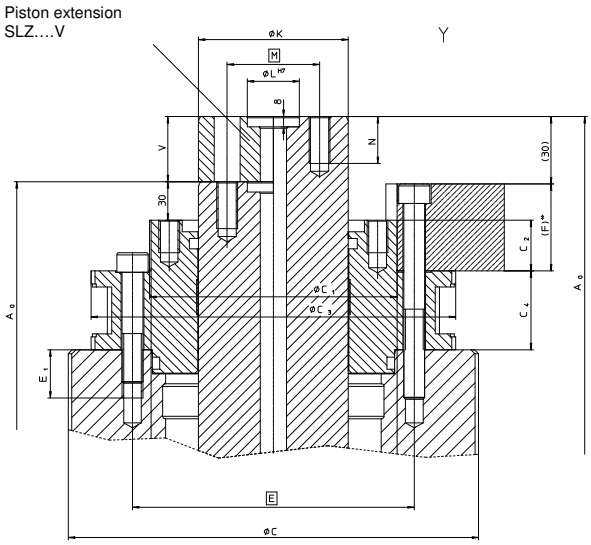

Completion to page 2 (detail X and Y)

The piston rod includes a central thread at small actuators (nominal force 10-63kN), bigger actuators (nominal force 100kN and more) are equiped with a hole pitch circle, measure M site 1 and 2, for the connection with spanning-equipment, power-transmission tools, cardan-links, force-transducers, etc..

Head-mounting

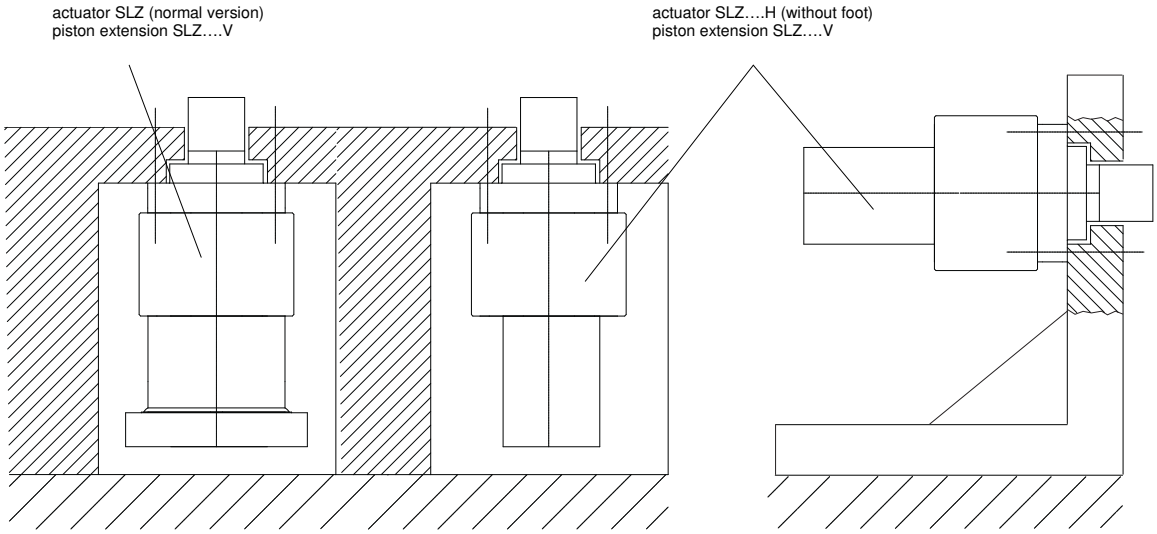

Possibilities of application

Linear actuators type SLZ can be installed upright, horizontally or suspended in test systems and machines. By projecting a test-bench the space requirement of valveplate, multivalve, servoblock and other parts like as tubes and cables may not be neglected.

Foot mounting: Linear actuators type SLZ with base flange can be screwed to foundations, base plates and testing frames with the help of the holes of the hole pitch circle.

Head mounting: The necessary threaded holes for head mounting of linear actuators tyle SLZ on a machine table or on the crosshead of a 2-column or 4-column machine frame are provided in the upper part of the actuator housing.

© release September 2011
SANDNER-Messtechnik GmbH
Am Winkelgraben 4
64584 Biebesheim / Rhein
Tel. +49 6258 / 98380
Fax +49 6258 / 983820
info@sandner-messtechnik.com
www.sandner-messtechnik.com

Technical data

Dimensions and weights of SLZ standard actuators

Size range (nominal force) kN		10-63	100/160	250/400	630		1000	
Models (actuator name)		SLZ 10			SLZ 630	SLZ 630 H	SLZ 1000	SLZ 1000 H
		SLZ 16						
		SLZ 25	SLZ 100	SLZ 250				
		SLZ 40	SLZ 160	SLZ 400				
		SLZ 63						
	Nominal stroke S_n (mm)							
Dimension A_0	40	498	-	-	-		-	
	100	558	605	605	705	750	705	750
	250	856	905	905	1005	1050	1005	1050
	400	1156	1205	1205	1305	1350	1305	1350
B		205	275	370	470	-	550	-
C		126	224	315	370		440	
C_1		-	125	190	236		300	
C_2		-	28	39	50		50	
C_3		125	205	280	360		430	
C_4		15	54	60	79		82	
E		Ø100 10xM12	Ø160 12xM12	Ø224 12xM16	Ø280 12xM20		Ø355 12xM24	
E_1		25	25	30	30		50	
G		Ø180 10x Ø11	Ø250 12x Ø14	Ø335 12x Ø18	Ø425 12x Ø22	-	Ø500 12x Ø26	-
H		50	60	70	80	-	90	-
J		57	105	145.5	180		216	
(K_A) K		(43) 45	80	125	160		200	
L		35 H7	20	40	40			
M		M24	Ø45 8xM10	Ø71 8xM16	Ø112 8xM20			
N		50	25	30	45			
V (extension)		-	35	45	45	-	45	-
Overflow W		18	18	8	5			
	Nominal stroke S_n (mm)							
weight (kg)	SLZ-…-40	35	-	-	-		-	
	SLZ-…-100	38	155	295	500		740	
	SLZ-…-250	65	240	435	730		1060	
	SLZ-…-400	-	300	560	960		1380	

Example: SLZ 630-100 VH

- Head mounting
- Piston extension 45mm
- Stroke 100mm
- Nominal force 630kN

V) A piston extension is required when an actuator SLZ 100 up to SLZ 1000 is mounted in a machine frame PC. Coding example: SLZ 630-100 V.

H) Head mounting by tapped holes in the top of the chassis (see page 3) Coding example: SLZ 630-100 H.

*) Dimension F: cross head (respectively thickness of plate) of frame PC.

SANDNER-Messtechnik GmbH
Am Winkelgraben 4
64584 Biebesheim / Rhein
Tel. +49 6258 / 98380
Fax +49 6258 / 983820

© release September 2011

info@sandner-messtechnik.com
www.sandner-messtechnik.com

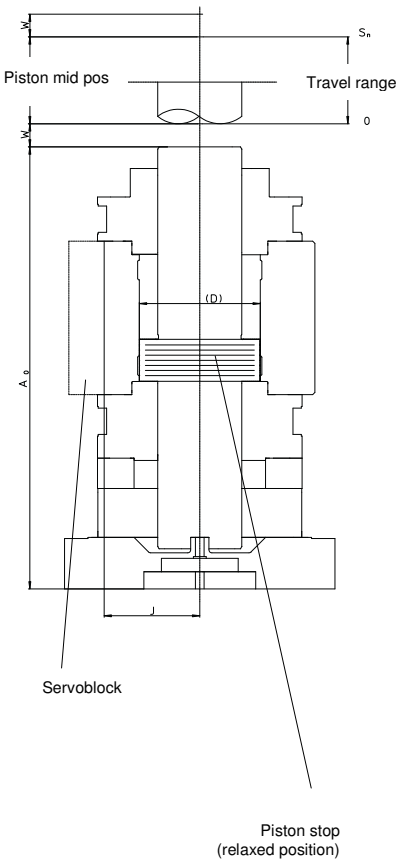

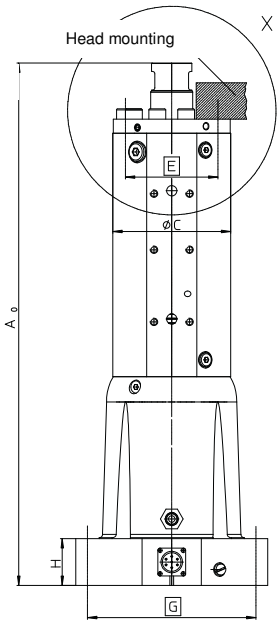

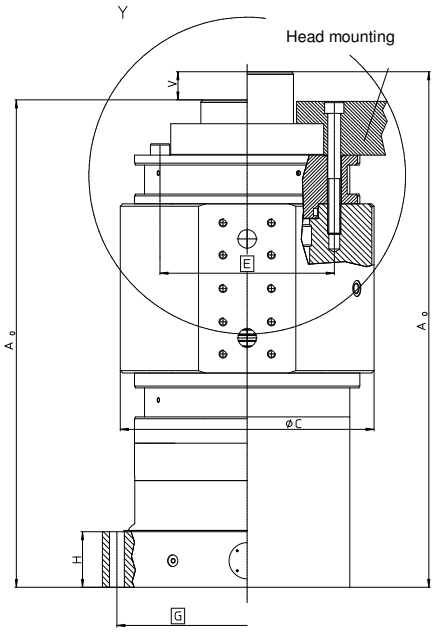

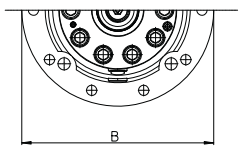

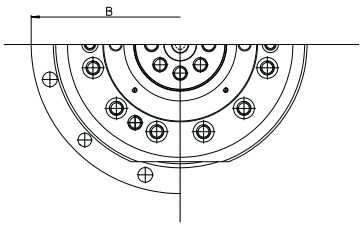

SLZ 10/ 16/ 25/ 40/ 63
detail X
SLZ 100/ 160/ 250/ 400/ 630/ 1000
detail Y

Piston expanse

$$A_K = \frac{\pi}{4}(D^2 - K^2)$$

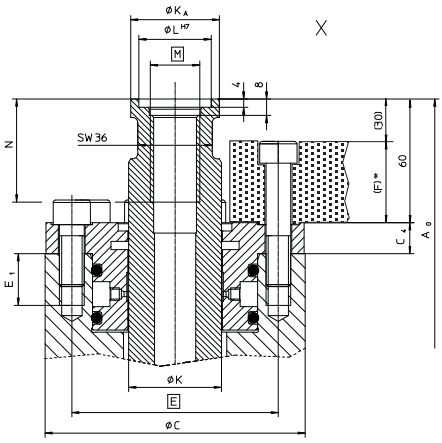

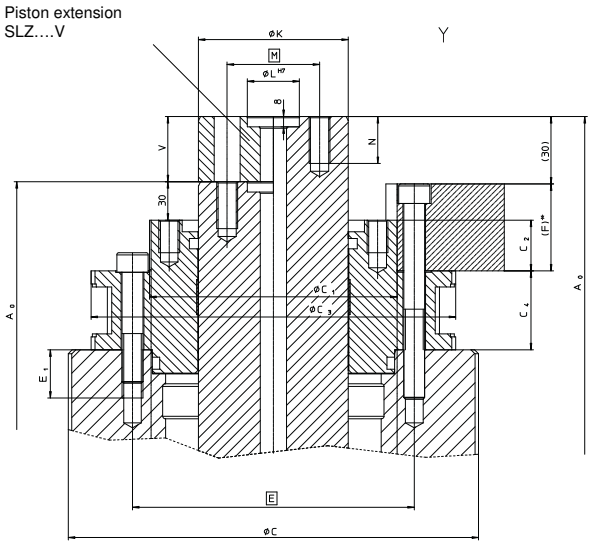

Completion to page 2 (detail X and Y)

The piston rod includes a central thread at small actuators (nominal force 10-63kN), bigger actuators (nominal force 100kN and more) are equiped with a hole pitch circle, measure M site 1 and 2, for the connection with spanning-equipment, power-transmission tools, cardan-links, force-transducers, etc..

Head-mounting

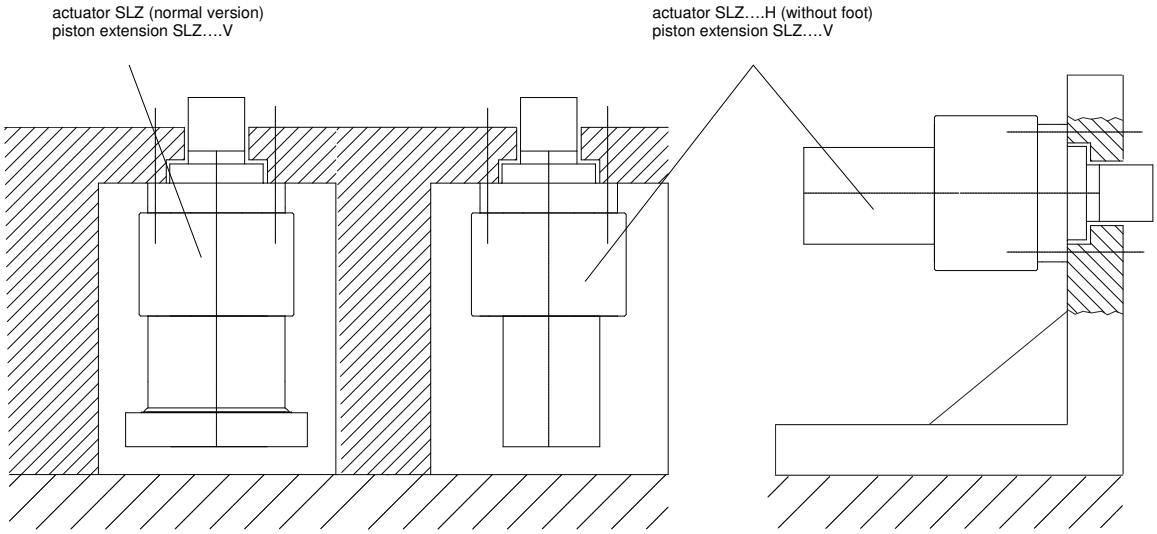

Possibilities of application

Linear actuators type SLZ can be installed upright, horizontally or suspended in test systems and machines. By projecting a test-bench the space requirement of valveplate, multivalve, servoblock and other parts like as tubes and cables may not be neglected.

Foot mounting: Linear actuators type SLZ with base flange can be screwed to foundations, base plates and testing frames with the help of the holes of the hole pitch circle.

Head mounting: The necessary threaded holes for head mounting of linear actuators tyle SLZ on a machine table or on the crosshead of a 2-column or 4-column machine frame are provided in the upper part of the actuator housing.

© release September 2011
SANDNER-Messtechnik GmbH
Am Winkelgraben 4
64584 Biebesheim / Rhein
Tel. +49 6258 / 98380
Fax +49 6258 / 983820
info@sandner-messtechnik.com
www.sandner-messtechnik.com

Technical data

Dimensions and weights of SLZ standard actuators

Size range (nominal force) kN		10-63	100/160	250/400	630		1000	
Models (actuator name)		SLZ 10			SLZ 630	SLZ 630 H	SLZ 1000	SLZ 1000 H
		SLZ 16						
		SLZ 25	SLZ 100	SLZ 250				
		SLZ 40	SLZ 160	SLZ 400				
		SLZ 63						
	Nominal stroke S_n (mm)							
Dimension A_0	40	498	-	-	-		-	
	100	558	605	605	705	750	705	750
	250	856	905	905	1005	1050	1005	1050
	400	1156	1205	1205	1305	1350	1305	1350
B		205	275	370	470	-	550	-
C		126	224	315	370		440	
C_1		-	125	190	236		300	
C_2		-	28	39	50		50	
C_3		125	205	280	360		430	
C_4		15	54	60	79		82	
E		Ø100 10xM12	Ø160 12xM12	Ø224 12xM16	Ø280 12xM20		Ø355 12xM24	
E_1		25	25	30	30		50	
G		Ø180 10x Ø11	Ø250 12x Ø14	Ø335 12x Ø18	Ø425 12x Ø22	-	Ø500 12x Ø26	-
H		50	60	70	80	-	90	-
J		57	105	145.5	180		216	
(K_A) K		(43) 45	80	125	160		200	
L		35 H7	20	40	40			
M		M24	Ø45 8xM10	Ø71 8xM16	Ø112 8xM20			
N		50	25	30	45			
V (extension)		-	35	45	45	-	45	-
Overflow W		18	18	8	5			
	Nominal stroke S_n (mm)							
weight (kg)	SLZ-…-40	35	-	-	-		-	
	SLZ-…-100	38	155	295	500		740	
	SLZ-…-250	65	240	435	730		1060	
	SLZ-…-400	-	300	560	960		1380	

Example: SLZ 630-100 VH

- Head mounting
- Piston extension 45mm
- Stroke 100mm
- Nominal force 630kN

V) A piston extension is required when an actuator SLZ 100 up to SLZ 1000 is mounted in a machine frame PC. Coding example: SLZ 630-100 V.

H) Head mounting by tapped holes in the top of the chassis (see page 3) Coding example: SLZ 630-100 H.

*) Dimension F: cross head (respectively thickness of plate) of frame PC.

SANDNER-Messtechnik GmbH
Am Winkelgraben 4
64584 Biebesheim / Rhein
Tel. +49 6258 / 98380
Fax +49 6258 / 983820

© release September 2011

info@sandner-messtechnik.com
www.sandner-messtechnik.com

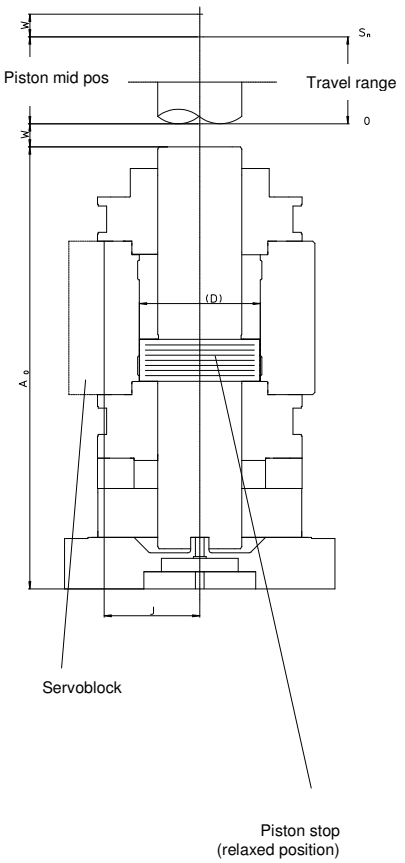

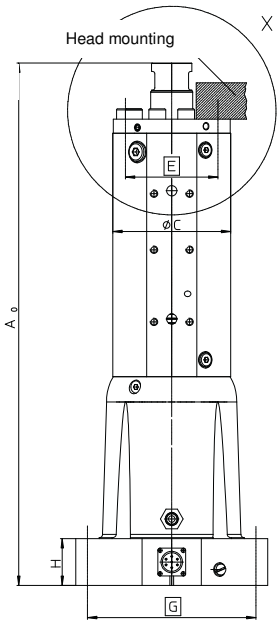

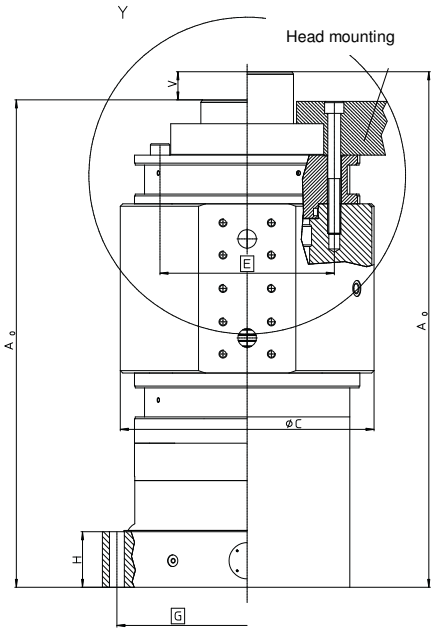

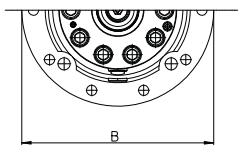

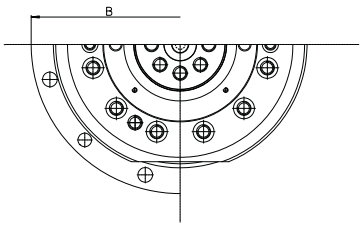

SLZ 10/ 16/ 25/ 40/ 63
detail X
SLZ 100/ 160/ 250/ 400/ 630/ 1000
detail Y

Piston expanse

$$A_K = \frac{\pi}{4}(D^2 - K^2)$$

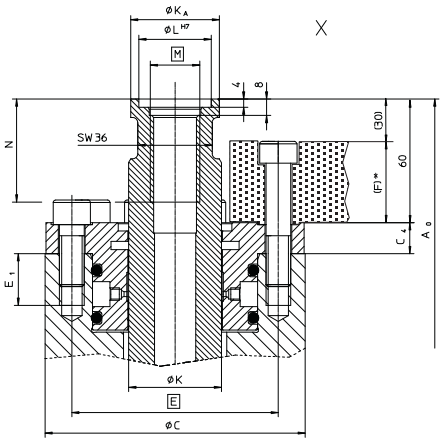

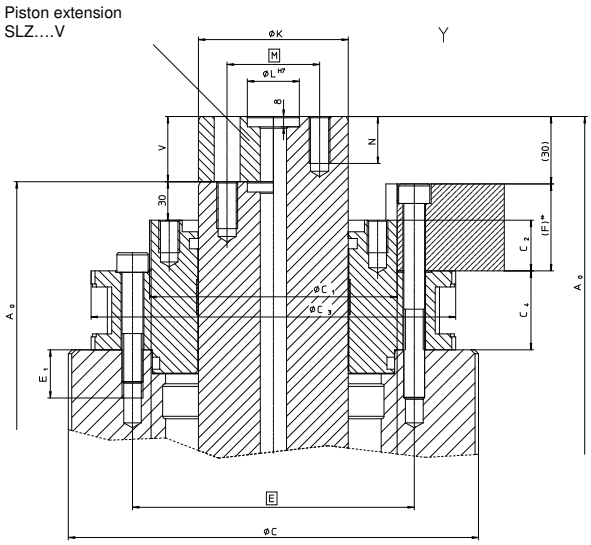

Completion to page 2 (detail X and Y)

The piston rod includes a central thread at small actuators (nominal force 10-63kN), bigger actuators (nominal force 100kN and more) are equiped with a hole pitch circle, measure M site 1 and 2, for the connection with spanning-equipment, power-transmission tools, cardan-links, force-transducers, etc..

Head-mounting

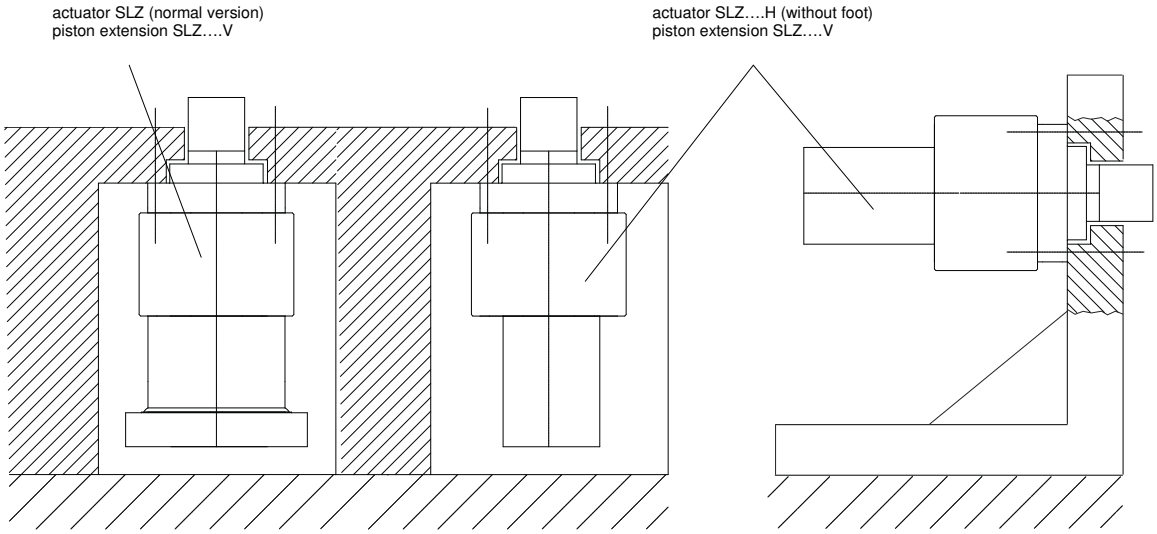

Possibilities of application

Linear actuators type SLZ can be installed upright, horizontally or suspended in test systems and machines. By projecting a test-bench the space requirement of valveplate, multivalve, servoblock and other parts like as tubes and cables may not be neglected.

Foot mounting: Linear actuators type SLZ with base flange can be screwed to foundations, base plates and testing frames with the help of the holes of the hole pitch circle.

Head mounting: The necessary threaded holes for head mounting of linear actuators tyle SLZ on a machine table or on the crosshead of a 2-column or 4-column machine frame are provided in the upper part of the actuator housing.

© release September 2011
SANDNER-Messtechnik GmbH
Am Winkelgraben 4
64584 Biebesheim / Rhein
Tel. +49 6258 / 98380
Fax +49 6258 / 983820
info@sandner-messtechnik.com
www.sandner-messtechnik.com

Technical data

Dimensions and weights of SLZ standard actuators

Size range (nominal force) kN		10-63	100/160	250/400	630		1000	
Models (actuator name)		SLZ 10			SLZ 630	SLZ 630 H	SLZ 1000	SLZ 1000 H
		SLZ 16						
		SLZ 25	SLZ 100	SLZ 250				
		SLZ 40	SLZ 160	SLZ 400				
		SLZ 63						
	Nominal stroke S_n (mm)							
Dimension A_0	40	498	-	-	-		-	
	100	558	605	605	705	750	705	750
	250	856	905	905	1005	1050	1005	1050
	400	1156	1205	1205	1305	1350	1305	1350
B		205	275	370	470	-	550	-
C		126	224	315	370		440	
C_1		-	125	190	236		300	
C_2		-	28	39	50		50	
C_3		125	205	280	360		430	
C_4		15	54	60	79		82	
E		Ø100 10xM12	Ø160 12xM12	Ø224 12xM16	Ø280 12xM20		Ø355 12xM24	
E_1		25	25	30	30		50	
G		Ø180 10x Ø11	Ø250 12x Ø14	Ø335 12x Ø18	Ø425 12x Ø22	-	Ø500 12x Ø26	-
H		50	60	70	80	-	90	-
J		57	105	145.5	180		216	
(K_A) K		(43) 45	80	125	160		200	
L		35 H7	20	40	40			
M		M24	Ø45 8xM10	Ø71 8xM16	Ø112 8xM20			
N		50	25	30	45			
V (extension)		-	35	45	45	-	45	-
Overflow W		18	18	8	5			
	Nominal stroke S_n (mm)							
weight (kg)	SLZ-…-40	35	-	-	-		-	
	SLZ-…-100	38	155	295	500		740	
	SLZ-…-250	65	240	435	730		1060	
	SLZ-…-400	-	300	560	960		1380	

Example: SLZ 630-100 VH

- Head mounting
- Piston extension 45mm
- Stroke 100mm
- Nominal force 630kN

V) A piston extension is required when an actuator SLZ 100 up to SLZ 1000 is mounted in a machine frame PC. Coding example: SLZ 630-100 V.

H) Head mounting by tapped holes in the top of the chassis (see page 3) Coding example: SLZ 630-100 H.

*) Dimension F: cross head (respectively thickness of plate) of frame PC.

SANDNER-Messtechnik GmbH
Am Winkelgraben 4
64584 Biebesheim / Rhein
Tel. +49 6258 / 98380
Fax +49 6258 / 983820

© release September 2011

info@sandner-messtechnik.com
www.sandner-messtechnik.com

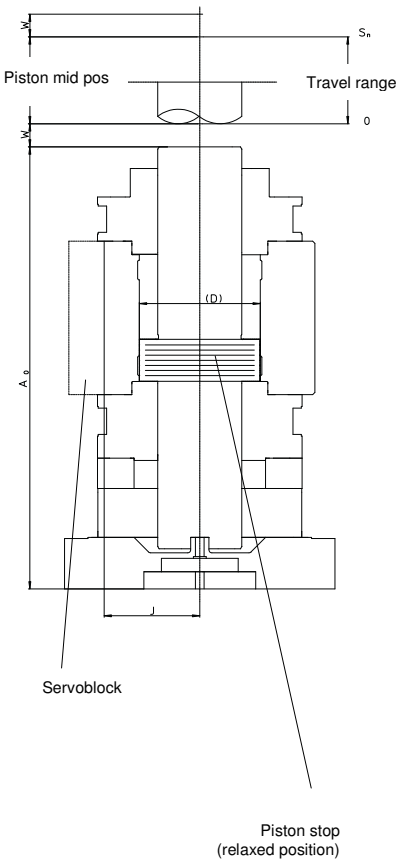

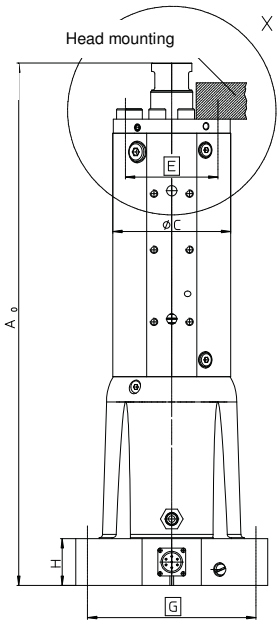

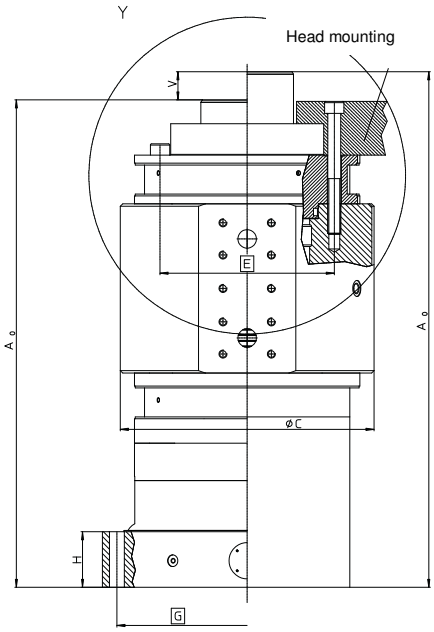

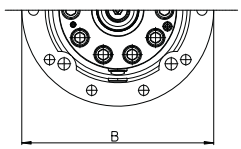

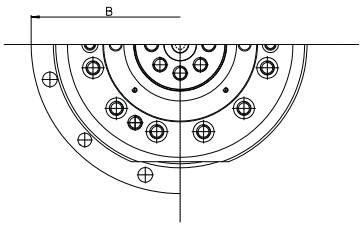

SLZ 10/ 16/ 25/ 40/ 63
detail X
SLZ 100/ 160/ 250/ 400/ 630/ 1000
detail Y

Piston expanse

$$A_K = \frac{\pi}{4}(D^2 - K^2)$$

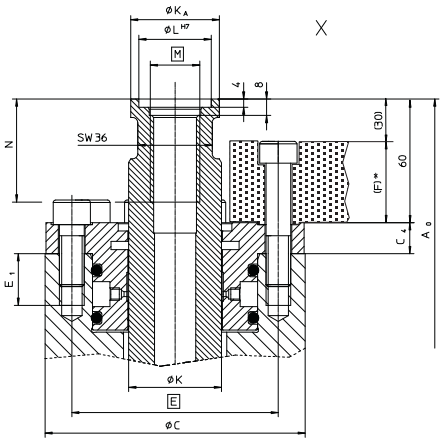

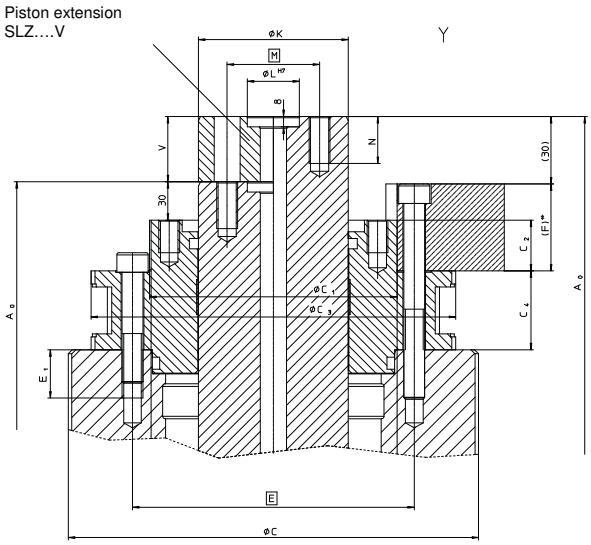

Completion to page 2 (detail X and Y)

The piston rod includes a central thread at small actuators (nominal force 10-63kN), bigger actuators (nominal force 100kN and more) are equiped with a hole pitch circle, measure M site 1 and 2, for the connection with spanning-equipment, power-transmission tools, cardan-links, force-transducers, etc..

Head-mounting

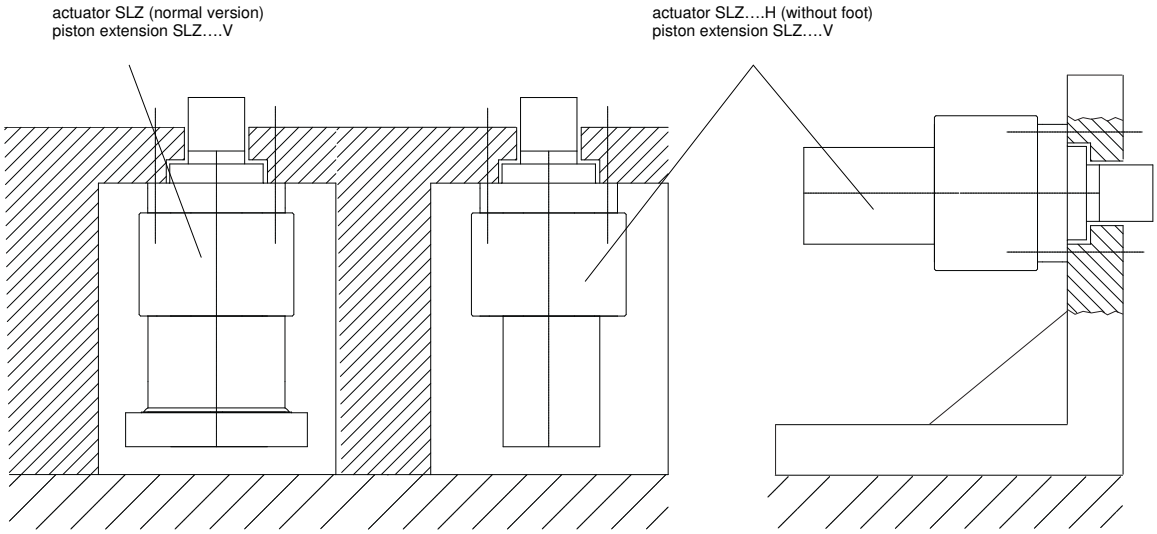

Possibilities of application

Linear actuators type SLZ can be installed upright, horizontally or suspended in test systems and machines. By projecting a test-bench the space requirement of valveplate, multivalve, servoblock and other parts like as tubes and cables may not be neglected.

Foot mounting: Linear actuators type SLZ with base flange can be screwed to foundations, base plates and testing frames with the help of the holes of the hole pitch circle.

Head mounting: The necessary threaded holes for head mounting of linear actuators tyle SLZ on a machine table or on the crosshead of a 2-column or 4-column machine frame are provided in the upper part of the actuator housing.

© release September 2011
SANDNER-Messtechnik GmbH
Am Winkelgraben 4
64584 Biebesheim / Rhein
Tel. +49 6258 / 98380
Fax +49 6258 / 983820
info@sandner-messtechnik.com
www.sandner-messtechnik.com